PART NAME	PW SERIERS UL94-5VA ABS ENCLOSURE	PART No.	PW-12850 & PW-12850-T	REVISION DATE	2/13/2020

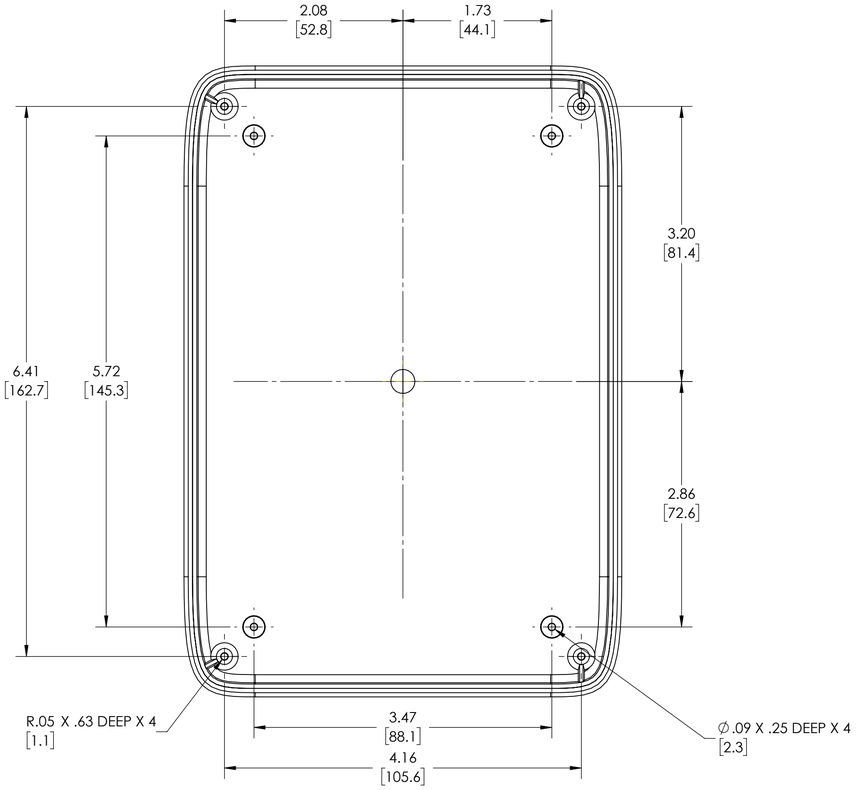

INSIDE VIEW OF BODY
COVER NOT SHOWN

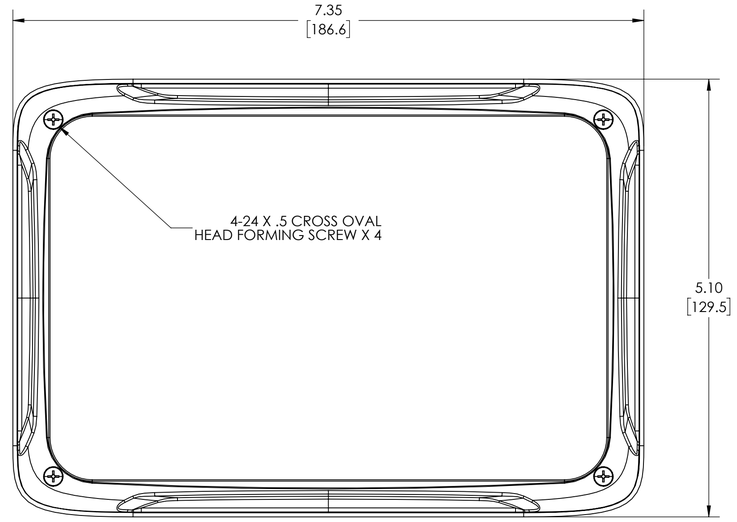

NOTES:

1. MATERIAL:
   BODY- BLACK ABS POLYAC PA-765
   COVER- BLACK ABS POLYAC PA-765
   TEXTURED/FLUSH OR RECESSED SMOOTH
2. UL94 VO(1.5mm) AND 5VA (3mm) FLAMMABILITY RATING.
3. COVER IS REMOVABLE
4. DIMENSIONS ARE INCH [MM]

DRAWING FOR REFERENCE
WE RESERVE THE RIGHT TO MAKE CHANGES TO OUR STANDARD PRODUCTS. PLEASE CONSULT WITH BUD INDUSTRIES PRIOR TO USING THIS DRAWING FOR DESIGN PURPOSE.

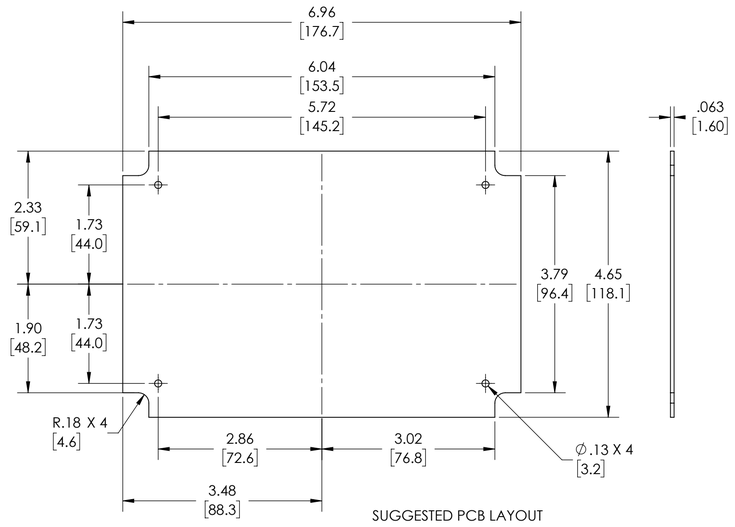

SUGGESTED PCB LAYOUT

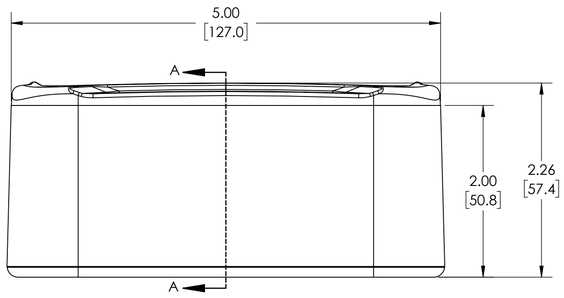

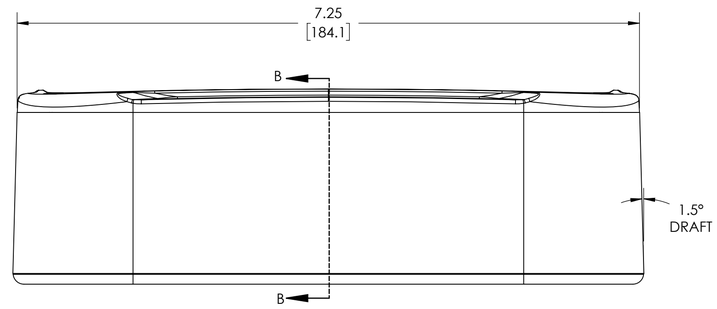

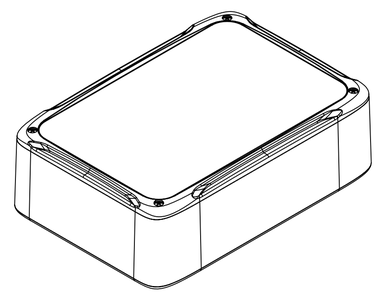

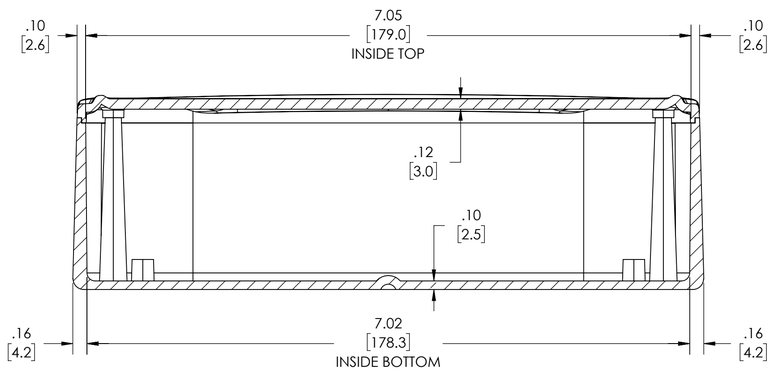

SECTION A-A

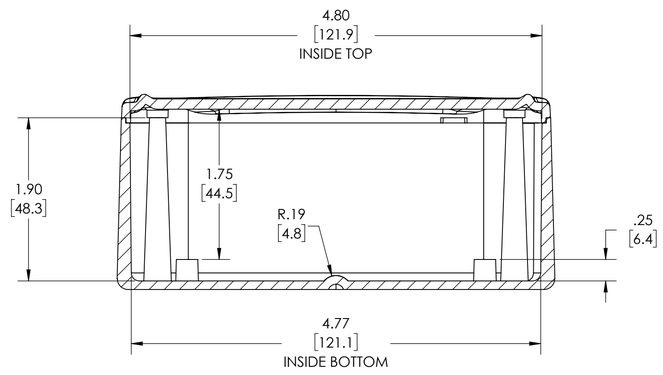

SECTION B-B